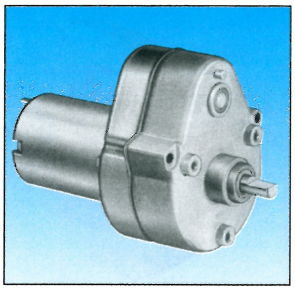

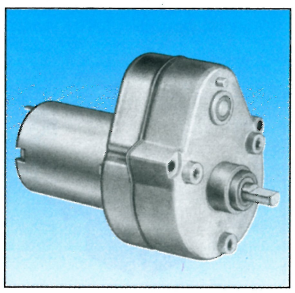

				1
82 869 0	82 869 0	82 849 0	82 849 0	
				2
12 V	24 V	12 V	24 V	
				3
—	—	—	—	
—	—	—	—	
—	—	—	—	
—	—	—	—	
82 869 001	82 869 011	●	●	
—	—	—	—	
82 869 006	82 869 012	●	●	
—	—	—	—	
—	—	—	—	
82 869 007	82 869 013	●	●	
—	—	—	—	
82 869 008	82 869 014	●	●	
—	—	—	—	
—	—	—	—	
82 869 009	82 869 015	●	●	
—	—	—	—	
●	●	●	●	
—	—	—	—	
82 869 010	82 869 016	●	●	
—	—	—	—	
●	●	●	●	
—	—	—	—	
—	—	—	—	
82 860 0	82 860 0	82 840 0	82 840 0	
81 033 0	81 033 0	81 033 0	81 033 0	
2	2	2	2	
1	1	1	1	
10	10	10	10	
3.9	3.9	1	1	
3	3	0.9	0.9	
50	50	50	50	
240	240	210	210	
				4
—	—	—	—	
—	—	—	—	
—	—	—	—	
●	●	●	●	
82 869 5	82 869 5	—	—	

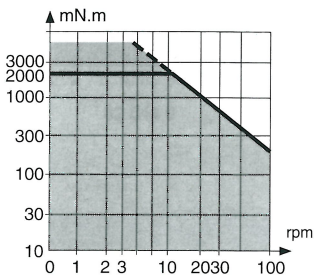

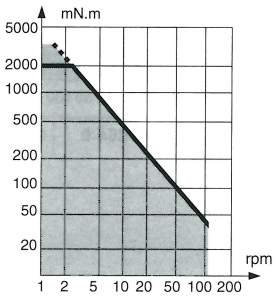

Dimensions :
82 841 0 - 82 861 0

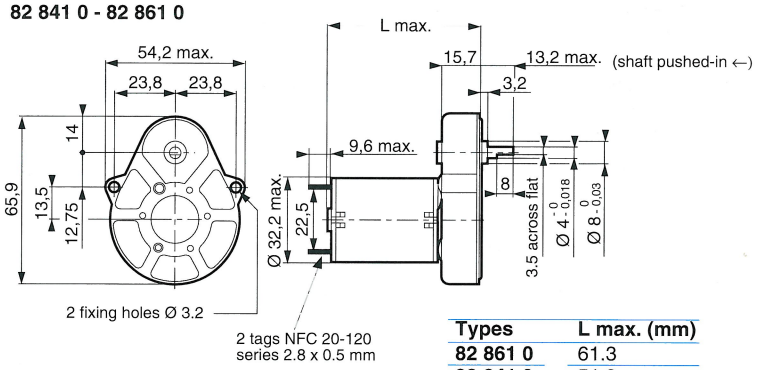

Types	L max. (mm)
82 861 0	61.3
82 841 0	51.3

Non stocked products : with gearbox output shafts
82 841 0 - 82 861 0

Shaft 79 200 967

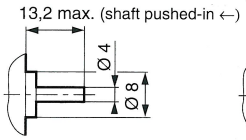

Shaft 79 200 779

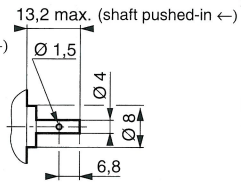

Shaft 70 999 421
SP1295.10

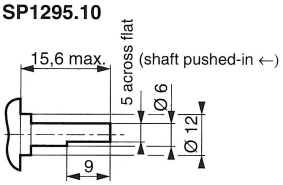

82 849 0 - 82 869 0

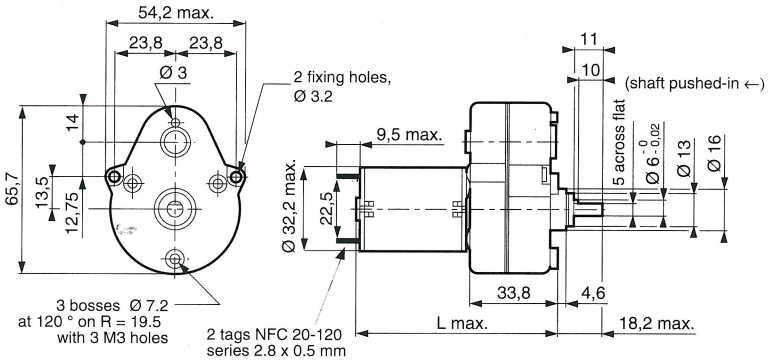

Shaft 79 202 573

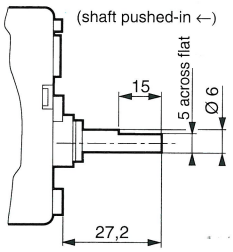

Types	L max. (mm)
82 869 0	79.6
82 849 0	69.6

To order, specify :

Standard products	3 Part number Example : D.C. geared motor - 82 869 001
● **Standard products, non stocked**	1 Type 2 Nominal voltage 3 Output speeds 4 Option Example : D.C. geared motor - 82 861 5 - 12 V - 179 rpm - output shaft 79 200 967 - with magnetic encoder 1 pulse per revolution

Crouzet